K.N.CROWDER mfg.inc.

Canada
K.N. CROWDER MFG. INC.
1220 Burloak Drive
Burlington, Ontario
L7L 6B3
Telephone (905) 315-9788
Toll Free Fax 1-800-567-0123
customerservice@kncrowder.com

USA
K.N. CROWDER INC.
210 Eighth Street South
Lewiston, New York
14092
Telephone (716) 754-8247
Toll Free Fax 1-800-567-0123
customerservice@kncrowder.com

C-205-4

- Extruded Aluminum Track
- 6061T6 Alloy Weighing 0.949 lbs. per foot
- **Load Capacity 250 lbs. (2 hangers)**

100,000 CYCLE TESTS

C-205-4 Hanger with C-204 Track Detail

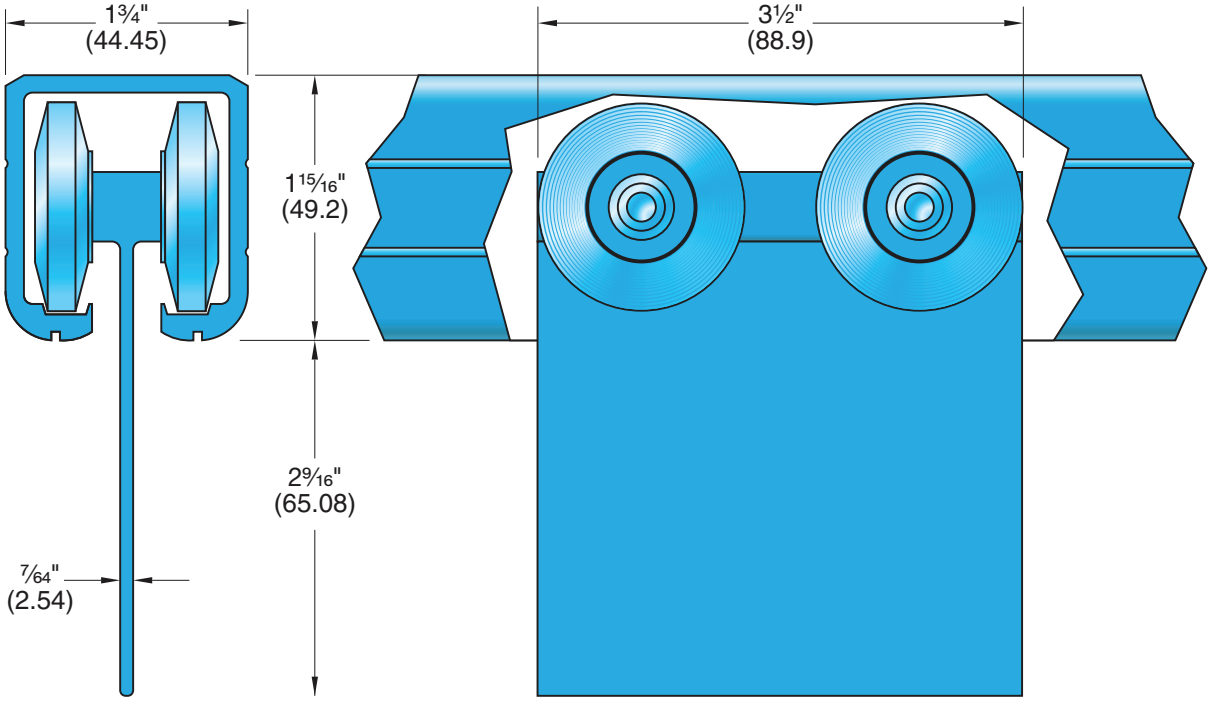

Part No.	Part Description		
Customer Name	Job No./Name	Date	Provided By
Note			