CDSM-1

Typical CCD-410-38 Example

For 1 3/8 in [34.9 mm] door applications

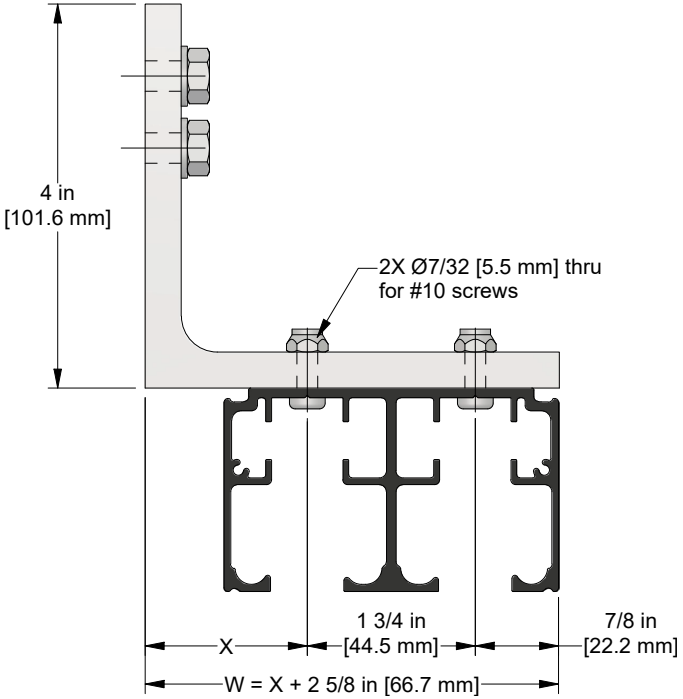

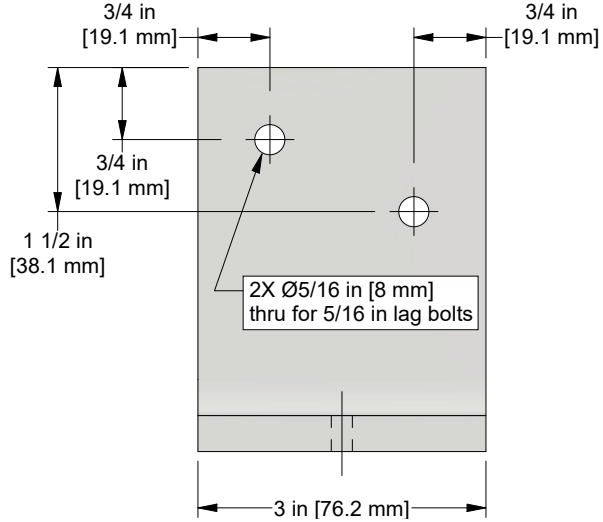

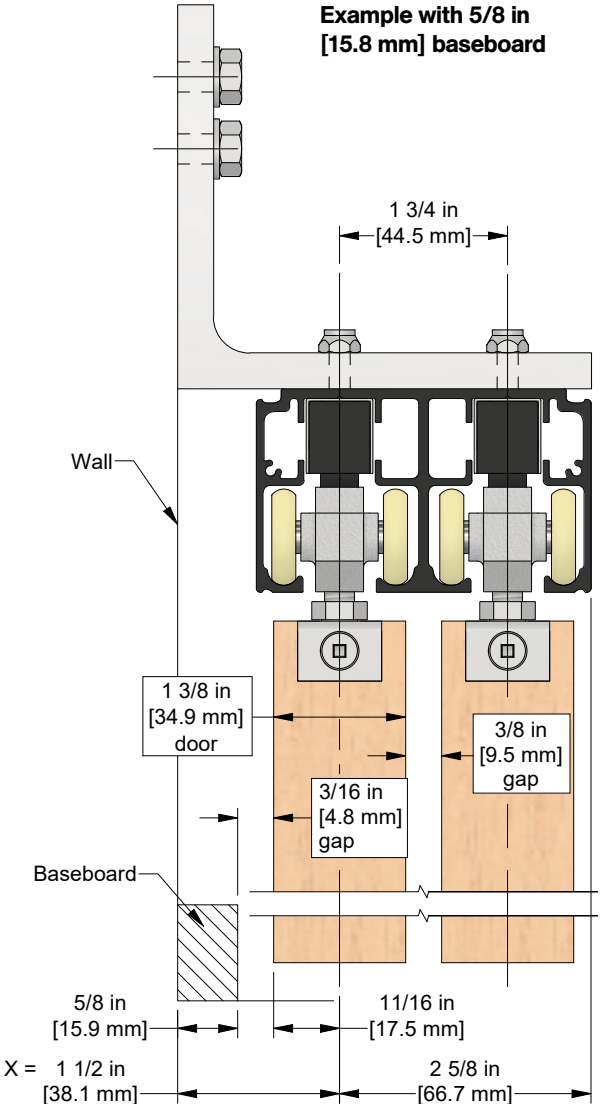

Customer to specify alternate spacing or offsets if required

$$\frac{\text{door thickness}}{2} + \text{baseboard thickness} + 3/16 \text{ in [4.76 mm]} = \text{"X"}$$

11/16 in [17.4 mm] + _____ **+ 3/16 in [4.76 mm] =** _____ ("X")
(1 3/8 in [34.9mm] door assumed)

Door thickness _____

Baseboard thickness _____

Product _____

Customer _____

Project _____

Drawn By _____

PO# _____

SO# _____

Date _____

I have confirmed the dimensions are correct and by way of my signature, KN Crowder has permission to use drawing and dimensions for production of CDSM-1 Brackets.

Signature _____

KN Crowder

1220 Burloak Drive, Burlington, Ontario, Canada, L7L 6B3
T. 1–866–999–1562 customerservice@kncrowder.com kncrowder.com
© 2020-2023 K.N. Crowder Mfg. Inc. All Rights Reserved.

This drawing is the property of K.N. Crowder Mfg. Inc. and is subject to return upon demand.
It must not be traced, copied, or reproduced in any manner, nor submitted to any outside parties for examination without our consent.