Crowder Slide
Application Form

R042026

KNC
Catch 'N' Close

Job _____

Opening ID _____
Submit a separate application form for each unique Opening ID. An Opening ID is considered unique if handing, clear opening dimensions, or door sizes differ within the project.

Company _____

Address _____

Name _____ **Phone** _____

Email _____

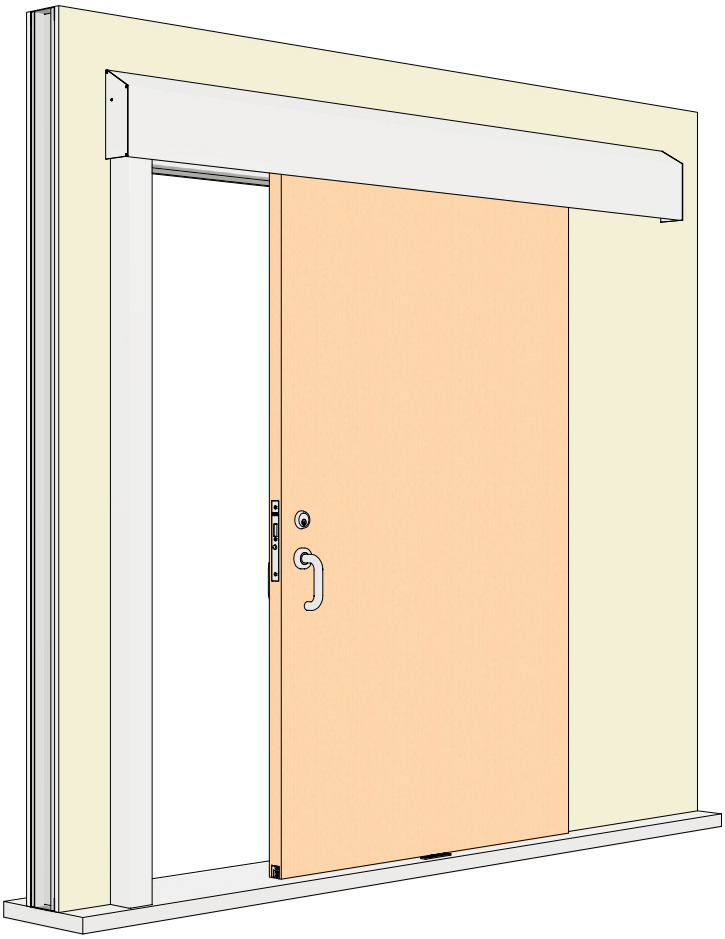

Note: Details are shown as **Right-hand Outside** [**RHO**] opening format

Opening Details

Number of openings _____
For this Opening ID

Door handing
If unspecified, handing defaults to **RHO** per drawings.

○ **Right-hand Outside** [**RHO**]

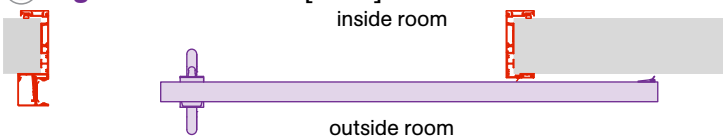

○ **Left-hand Outside** [**LHO**]

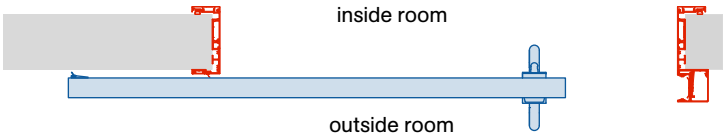

○ **Right-hand Inside** [**RHI**]

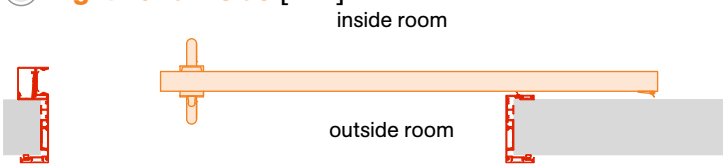

○ **Left-hand Inside** [**LHI**]

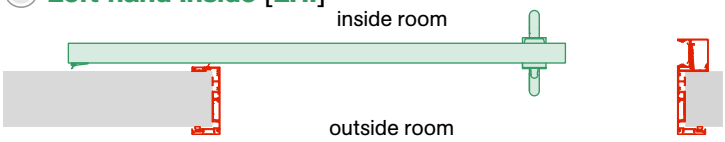

Rough opening guidelines:

Elevation View

Note: Details are shown as **Right-hand Outside** [**RHO**] opening format

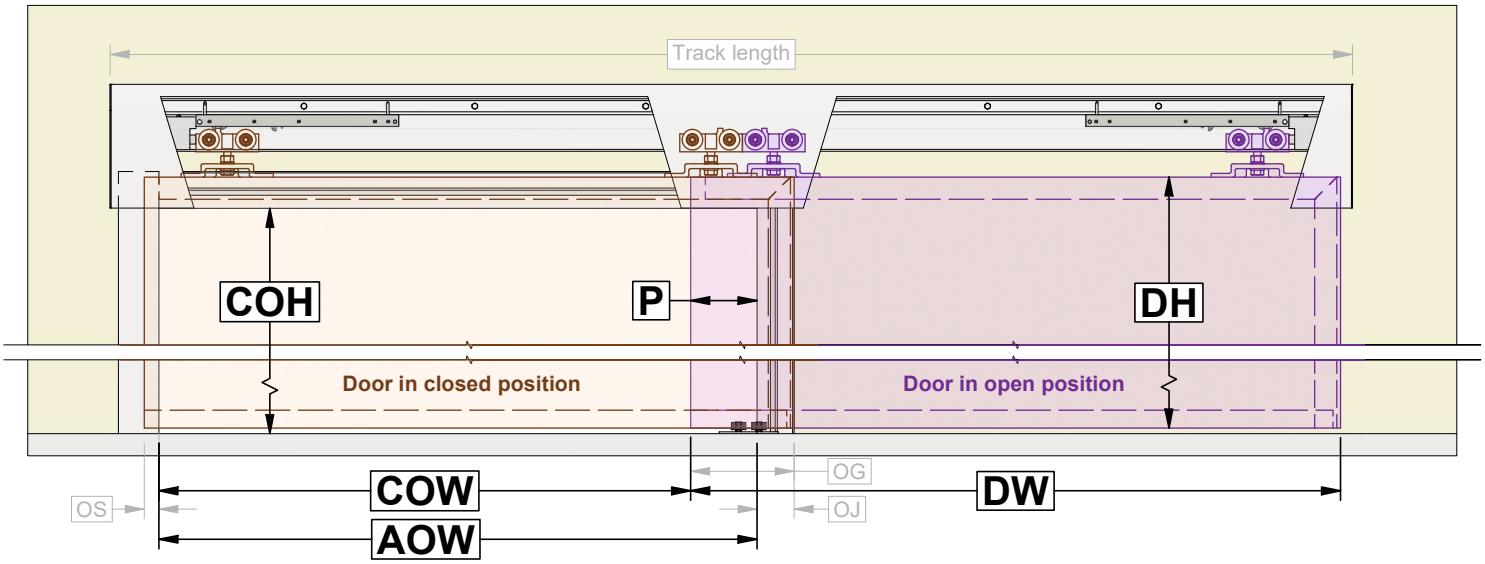

Plan View

Note: Details are shown as **Right-hand Outside** [**RHO**] opening format

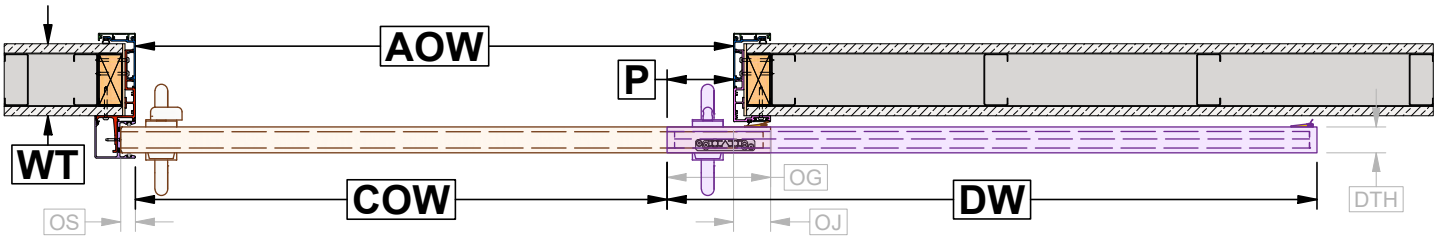

Door protrusion [P] _____

Will the door fully clear the opening, or will a lockset or handle pull cause it to protrude? If protruding, a minimum of 4 3/4 in [120.7 mm] is recommended.

Clear opening size (width x height)

Measured with the door fully open: width from the door's front edge to the Strike Jamb, height from the floor to the underside of the Header Jamb. If system is to be based on actual door size, enter door details in the designated space to the right instead.

[COW] _____ **x** **[COH]** _____

If using a standard door height of 84 in [2134 mm], clear opening height is +/- 82 1/4 in [2089 mm].

Actual opening width [AOW] _____

Clear opening [**CO**] dimension + door protrusion [**P**] dimension.

Door overlap at strike side of opening [OS]

Fixed dimension = 3/4 in [19.1 mm]

Door overlap at jamb side of opening [OJ]

Minimum (default) = 2 1/2 in [63.5 mm].

Door overlap on guide system [OG]

Minimum 6 in [152.4 mm] required. Typically, door protrusion [**P**] dimension + door overlap at jamb side [**OJ**]

Door supplied by others.

Door width [DW] _____

Not required if door protrusion [**P**] and clear opening details are provided. Door overlap: 3/4 in [19.1 mm] on strike side and a minimum of 2 1/2 in [63.5 mm] on jamb side. KNC will use door details to provide an Opening Layout drawing for review.

Door height [DH] _____

Door overlap at Header Jamb is approximately 2 in [50.8 mm]

Door thickness [DTH] 1 3/4 in [45 mm]

Door weight _____ ◯ lbs ◯ kg

Maximum: 300 lbs [136 kg]

Suggested minimum Opening Layout:

- **Door width [DW]** = 44 in [1118 mm]
- **Door height [DH]** = 84 in [2134 mm]
- **Door thickness [DTH]** = 1 3/4 in [45 mm]
- **Door protrusion [P]** = 4 3/4 in [120.7 mm]
- **Clear opening width [COW]** = 36 in [914 mm]
- **Clear opening height [COH]** = 82 1/4 in [2089 mm]
- **Actual opening width [AOW]** = 40 3/4 in [1035 mm]

Crowder Slide System

Finish

- Clear Anodized (standard)
- Black Anodized
- Custom Powder-Coat

Overall wall thickness [WT]

- 4 7/8 in [124 mm]

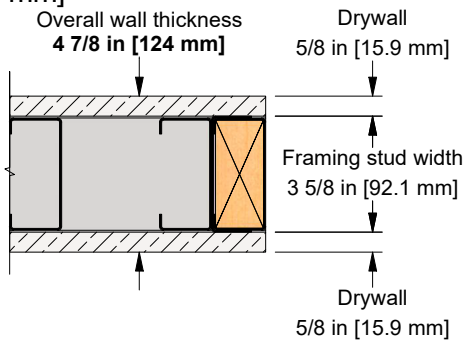

- 7 1/4 in [184 mm]

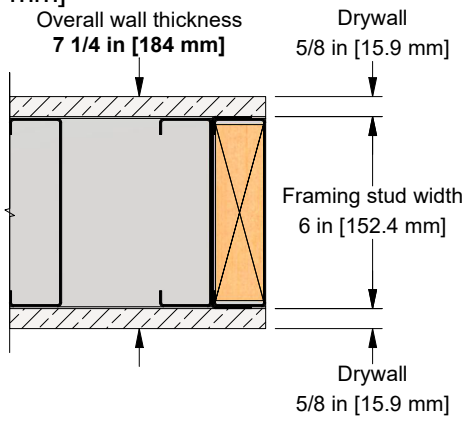

- Custom
  Custom wall thickness may be available upon request and depending on the quantity of openings required

Fascia Style

- Square Fascia

- Sloped Fascia

Sealing

- Acoustically-rated (AR)
  Includes perimeter medical-grade TPV gaskets, a double-guide system, and an automatic door bottom drop seal (CS-ADB and CS-200-2) — providing comprehensive light and sound control.
- Not acoustically-rated
  Includes vertical gaskets integrated into the strike cover for added door protection, a vertical jamb gasket, and an angled flat bar at the back end of the door to enhance privacy. Supplied with the C-914 and C-913-2NRW double-guide system. Header gaskets not included.

Scribe

- No, cut to final size
  (standard)
  Select vertical jamb components, track, and fascia will be cut to final size. All other components will be supplied with minimum 1/2 in [12.7 mm] extra length for on-site cutting to final size.
- Yes, include Scribe
  Select vertical jamb components, track, and fascia will be supplied 2 in [50.8 mm] longer at the floor end, allowing installers to cut them on-site to accommodate uneven site conditions.

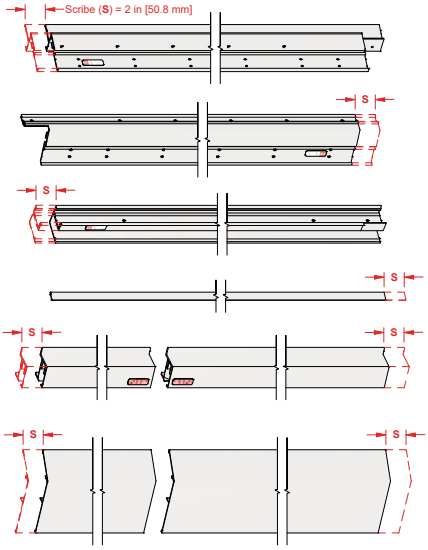

Optional Door Hardware

Self-Latching Sets

- C-95SLL-CHL Self-Latching, Self-Locking Security Lockset
  Includes C-90-AS Adjustable
  Strike assembly
  Barrier-free (ADA Compliant)
- C-95SLL-OIHL Self-Latching, Self-Locking Privacy Lockset
  Includes C-90-AS Adjustable
  Strike assembly
  Barrier-free (ADA Compliant)
- C-95SLL-LL
  Self-Latching Passage Set
  Includes C-90-AS Adjustable
  Strike assembly
  Barrier-free (ADA Compliant)

C-95SLL-OIHL shown

Electrified Lockset

- C-93EAL-CHL Electric Auto-Locking Security Lockset
  Includes C-93-AS Adjustable Electrified
  Strike assembly with wiring to connect to
  access control systems by others
  Barrier-free (ADA Compliant)

Privacy Lockset

- C-92L-HLDP-AS
  Privacy Lockset
  Includes C-90-AS Adjustable
  Strike assembly
  Barrier-free (ADA Compliant)

Other Lockset

Back-to-Back Handle Pulls

Barrier-free (ADA Compliant)

- C-90DP
  7 3/4 in [197 mm] round bar handle pulls
- CRT-DP18
  18 in [457 mm] round bar handle pulls
- CRT-DP36
  36 in [914 mm] round bar handle pulls
- CFT-DP18
  18 in [457 mm] flat bar handle pulls
- CFT-DP36
  36 in [914 mm] flat bar handle pulls

C-90DP shown

CRT-DP shown

Other Handle Pulls

Optional Strike Prep for Door Locking Hardware

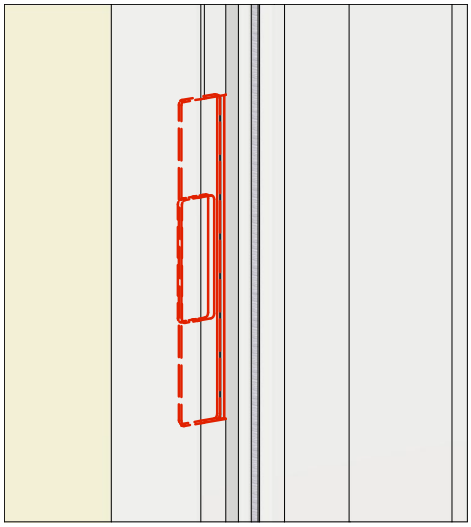

- No
- Yes

Additional Notes

Please forward any elevation and plan view drawings you have available for this application.

PRINT

KN Crowder
1220 Burloak Drive, Burlington, Ontario, Canada, L7L 6B3
T. 1—866—999—1562 customerservice@kncrowder.com kncrowder.com
© 2020-2026 K.N. Crowder Mfg. Inc. All Rights Reserved.
This drawing is the property of K.N. Crowder Mfg. Inc. and is subject to return upon demand.
It must not be traced, copied, or reproduced in any manner, nor submitted to any outside parties for examination without our consent.